ONECART™
Surgical Case Transport
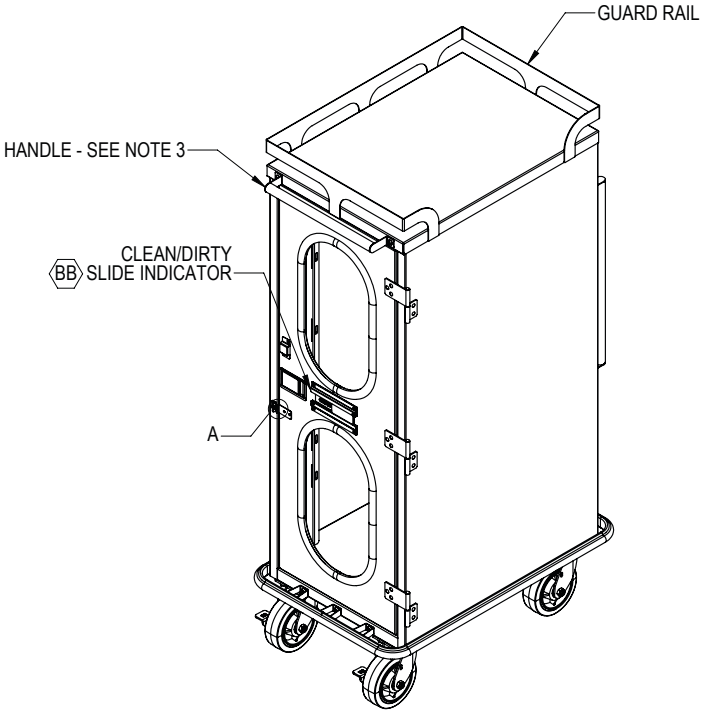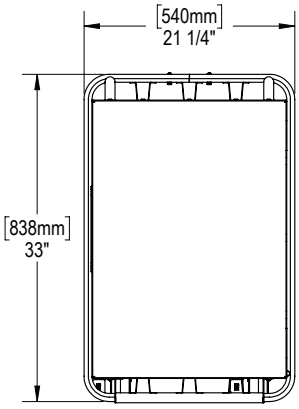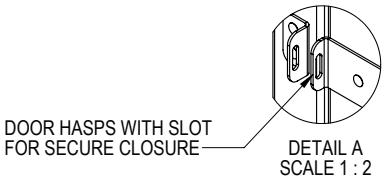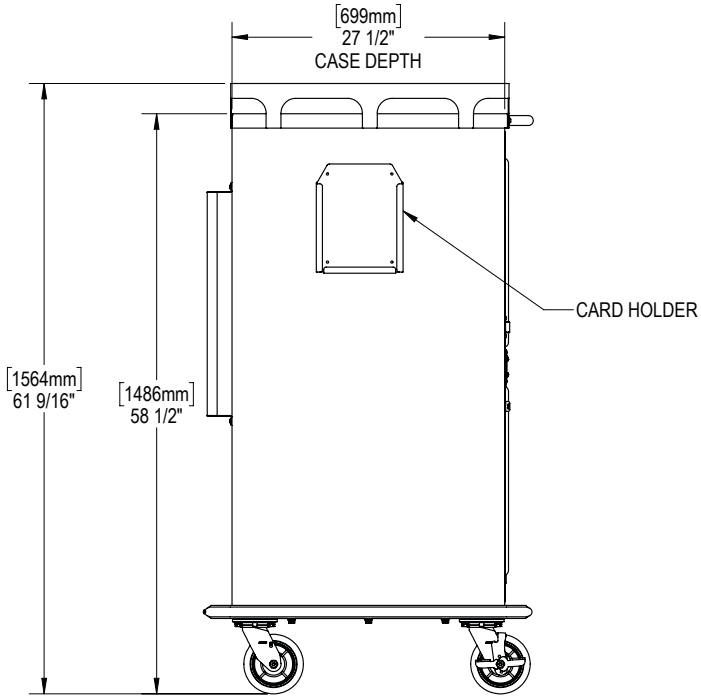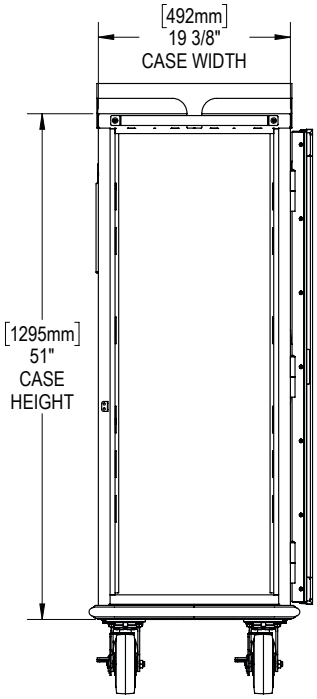
ONE CART™ Case Cart Physical and Dimensional Specifications